CLUTCH

SECTION CL

CONTENTS

PRECAUTIONS AND PREPARATION 2
Precautions 2
Preparation 2
CLUTCH SYSTEM — Hydraulic Type 3
CLUTCH SYSTEM — Mechanical Type 4
INSPECTION AND ADJUSTMENT 5
Adjusting Clutch Pedal 5
Bleeding Procedure — Hydraulic type 5
HYDRAULIC CLUTCH CONTROL 6
Clutch Master Cylinder 6
Operating Cylinder 7
Clutch Damper 8
CLUTCH RELEASE MECHANISM 9
CLUTCH DISC AND CLUTCH COVER 11
Clutch Disc 11
Clutch Cover and Flywheel 12
SERVICE DATA AND SPECIFICATIONS (SDS) 13
General Specifications 13
Inspection and Adjustment 14

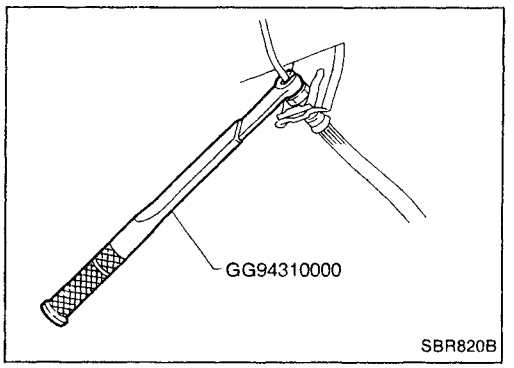

Precautions

- **Recommended fluid is brake fluid "DOT 3".**
- **Do not reuse drained brake fluid.**
- **Be careful not to splash brake fluid on painted areas.**
- **When removing and installing clutch piping, use Tool.**
- **Use new brake fluid to clean or wash all parts of master cylinder, operating cylinder and clutch damper.**
- **Never use mineral oils such as gasoline or kerosene. It will ruin the rubber parts of the hydraulic system.**

WARNING:
After cleaning clutch disc, wipe it with a dust collector. Do not use compressed air.

Preparation

SPECIAL SERVICE TOOLS

Tool number Tool name	Description	
GG94310000 Flare nut torque wrench	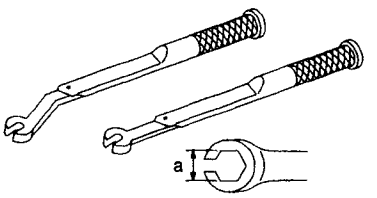 NT406	Removing and installing clutch piping **a: 10 mm (0.39 in)**
KV30101600 (New) KV30101000 (Former) Clutch aligning bar	New 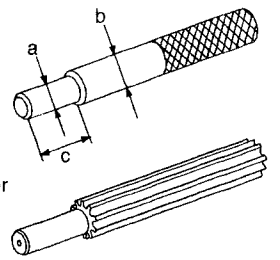 Former NT645	Installing clutch cover and clutch disc **a: 15.9 mm (0.626 in) dia.** **b: 17.9 mm (0.705 in) dia.** **c: 40 mm (1.57 in)**
ST20050240 Diaphragm spring adjusting wrench	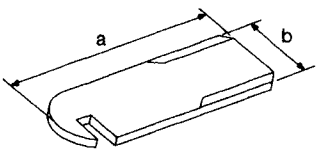 NT404	Adjusting unevenness of diaphragm spring of clutch cover **a: 150 mm (5.91 in)** **b: 25 mm (0.98 in)**

COMMERCIAL SERVICE TOOLS

Tool name	Description	
Equivalent to GG94310000 ① Flare nut crows foot ② Torque wrench	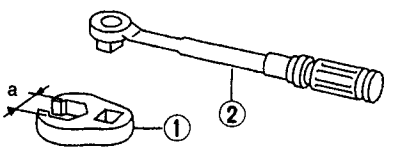 NT360	Removing and installing clutch piping **a: 10 mm (0.39 in)**

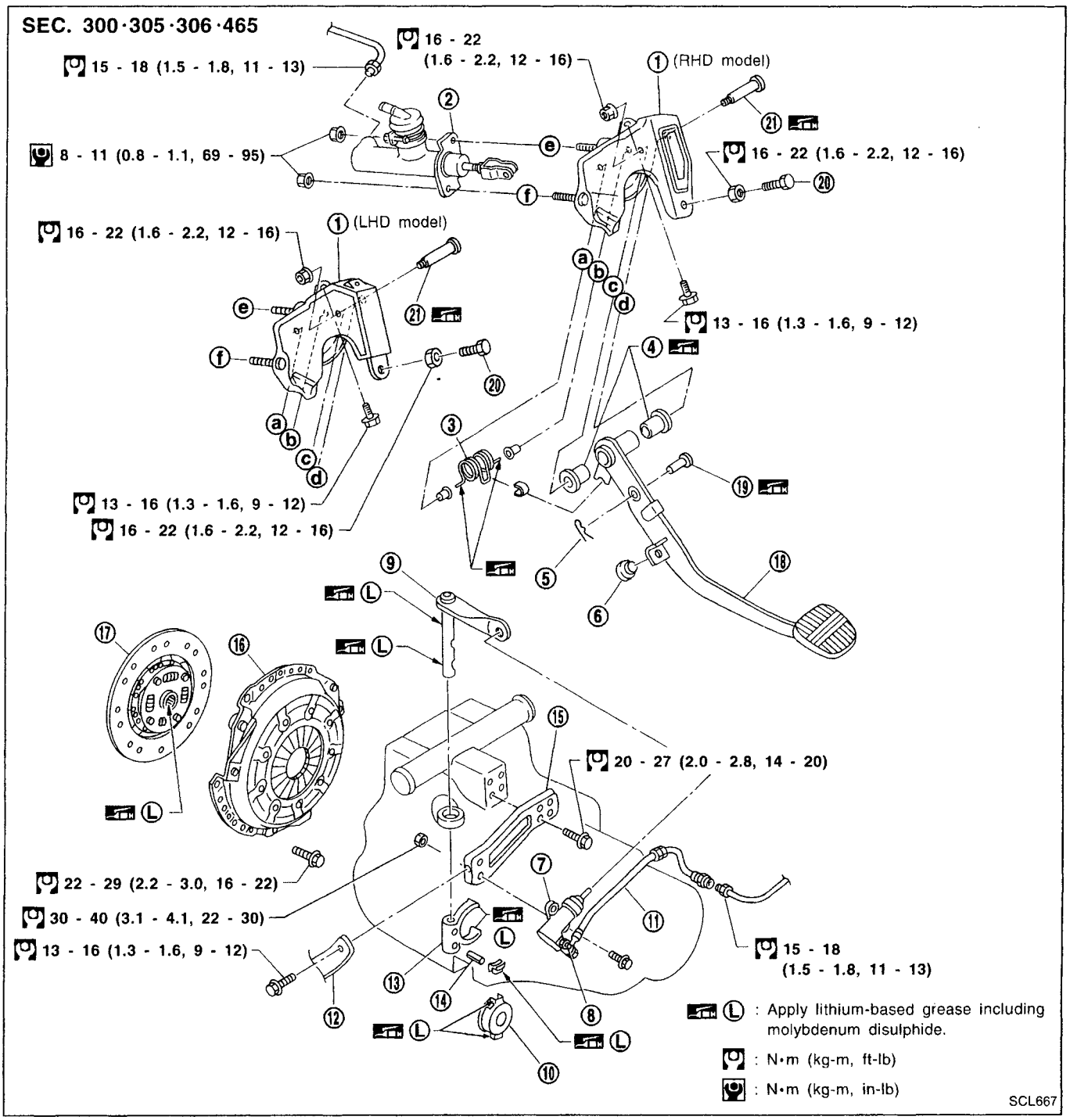

① Clutch pedal bracket
② Clutch master cylinder
③ Assist spring
④ Bushing
⑤ Pin
⑥ Stopper rubber
⑦ Operating cylinder
⑧ Air bleeder screw
⑨ Withdrawal lever
⑩ Release bearing
⑪ Clutch hose
⑫ Operating cylinder support bracket
⑬ Clutch lever
⑭ Spring pin
⑮ Operating cylinder bracket
⑯ Clutch cover
⑰ Clutch disc
⑱ Clutch pedal
⑲ Clevis pin
⑳ Pedal stopper
㉑ Fulcrum pin

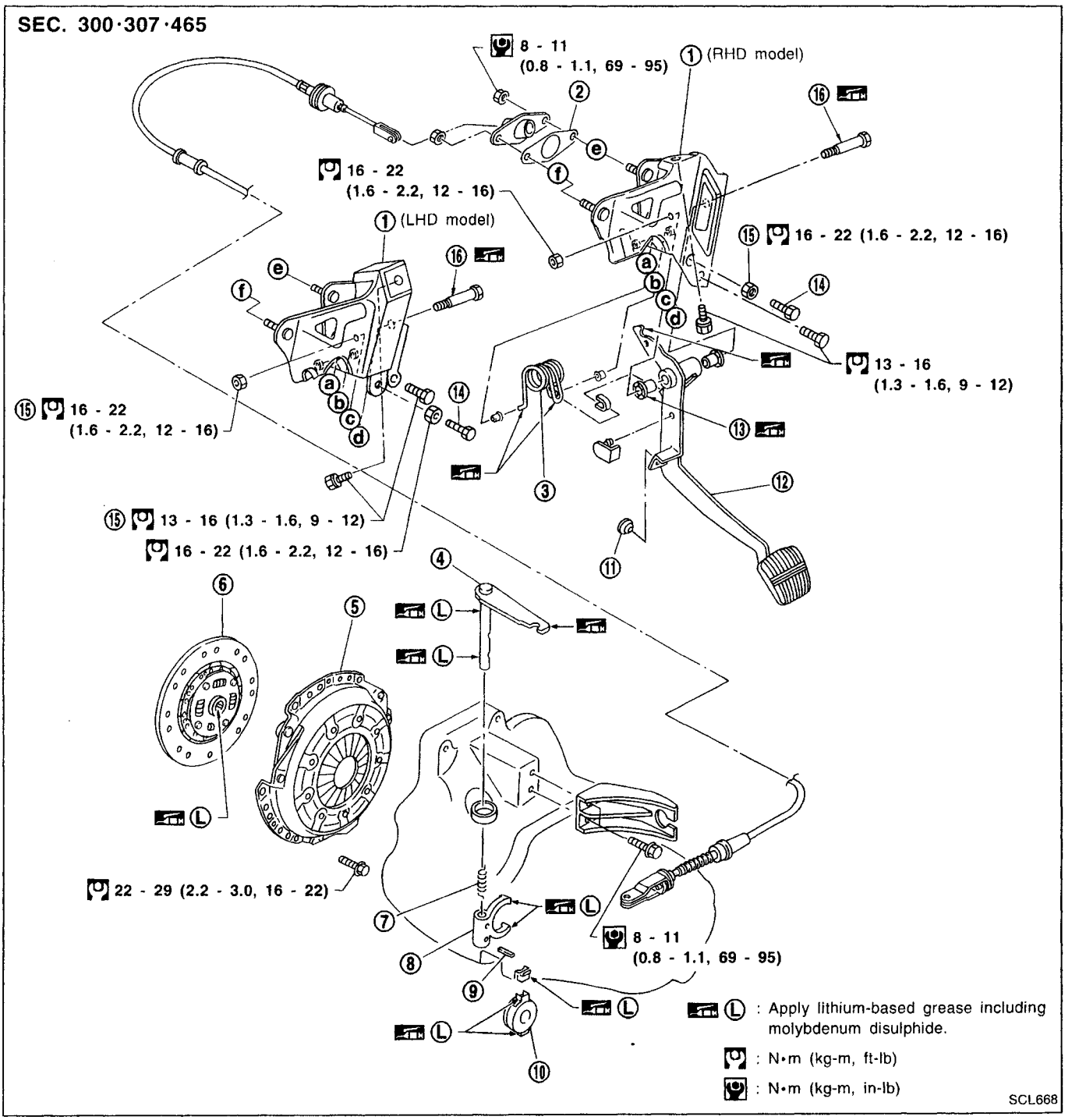

① Clutch pedal bracket
② Insulator
③ Assist spring
④ Withdrawal lever
⑤ Clutch cover
⑥ Clutch disc
⑦ Return spring
⑧ Clutch lever
⑨ Spring pin
⑩ Release bearing
⑪ Stopper rubber
⑫ Clutch pedal
⑬ Bushing
⑭ Pedal stopper
⑮ Lock nut
⑯ Fulcrum pin

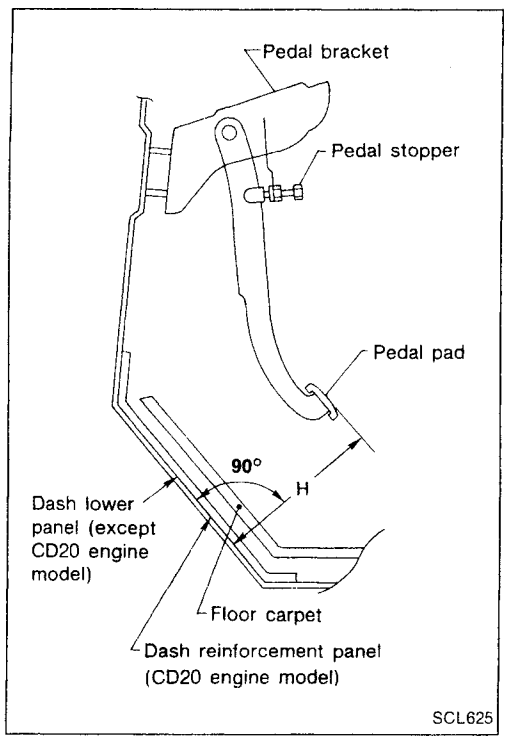

Adjusting Clutch Pedal

1. Adjust pedal height with pedal stopper.
   Pedal height "H":
   Refer to SDS, CL-14.

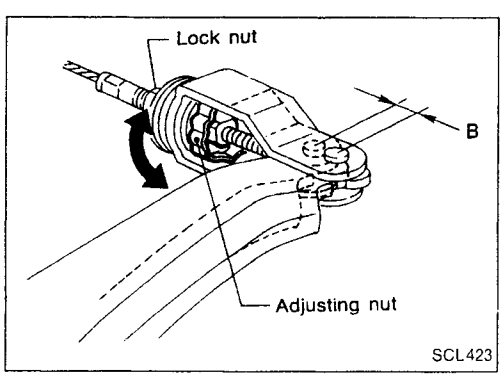

— For mechanical type —

2. Adjust withdrawal lever play "B" according to the following procedure.

a. Push withdrawal lever by hand until resistance is felt, and then tighten adjusting nut.

b. Turn back adjusting nut 2.5 to 3.5 turns, and then tighten lock nut.
   Withdrawal lever play "B":
   2.5 - 3.5 mm (0.098 - 0.138 in)
   Lock nut:
   : 3 - 4 N·m (0.3 - 0.4 kg-m, 26 - 35 in-lb)

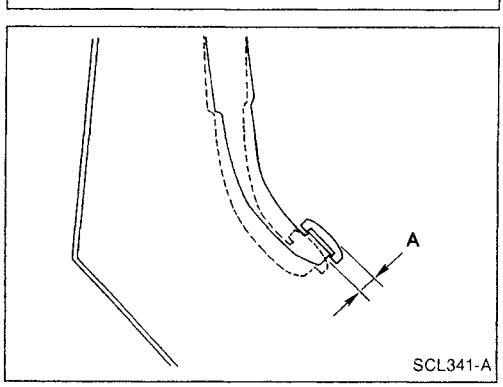

— For hydraulic type and mechanical type —

3. As a final check, measure pedal free travel "A" at center of pedal pad.
   Pedal free travel "A":
   Refer to SDS, CL-14.

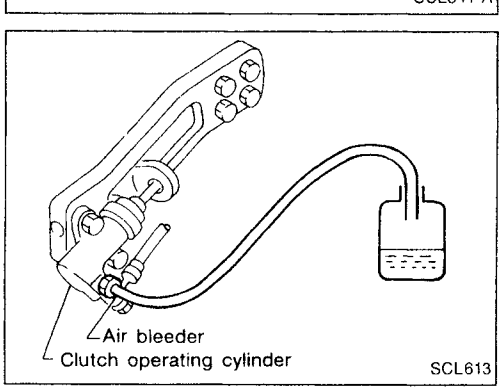

Bleeding Procedure — Hydraulic type

Bleed air according to the following procedure.

- **Carefully monitor fluid level at master cylinder during bleeding operation.**

1. Top up reservoir with recommended brake fluid.
2. Connect a transparent vinyl tube to air bleeder valve.
3. Fully depress clutch pedal several times.
4. With clutch pedal depressed, open bleeder valve to release air, then close bleeder valve.
5. Repeat steps 3 through 5 above until clear brake fluid comes out of air bleeder valve.

CL

Clutch Master Cylinder

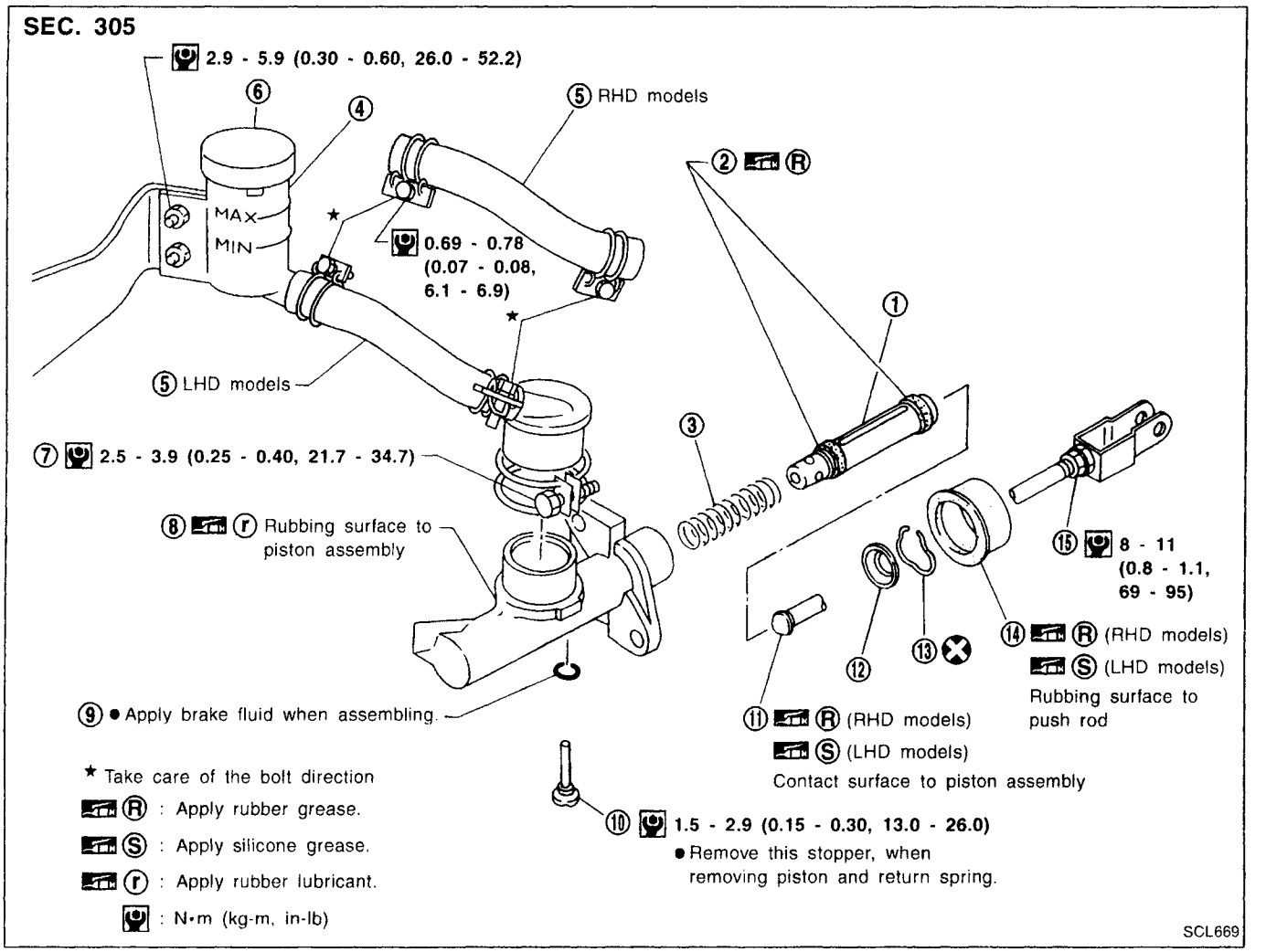

①	Piston assembly	⑥	Reservoir cap	⑪	Push rod
②	Piston cup	⑦	Reservoir band	⑫	Stopper
③	Return spring	⑧	Cylinder body	⑬	Stopper ring
④	Reservoir tank	⑨	Packing	⑭	Dust cover
⑤	Reservoir hose	⑩	Valve stopper	⑮	Lock nut

DISASSEMBLY AND ASSEMBLY

- Push piston into cylinder body with screwdriver when removing and installing valve stopper.

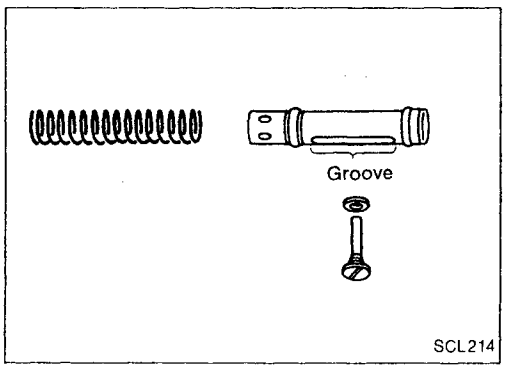

- Align groove of piston assembly and valve stopper when installing valve stopper.
- Check direction of piston cups.

Clutch Master Cylinder (Cont'd)

INSPECTION

Check the following items, and replace if necessary.

- Rubbing surface of cylinder and piston, for uneven wear, rust or damage
- Piston with piston cup, for wear or damage
- Return spring, for wear or damage
- Dust cover, for cracks, deformation or damage
- Reservoir, for deformation or damage

Operating Cylinder

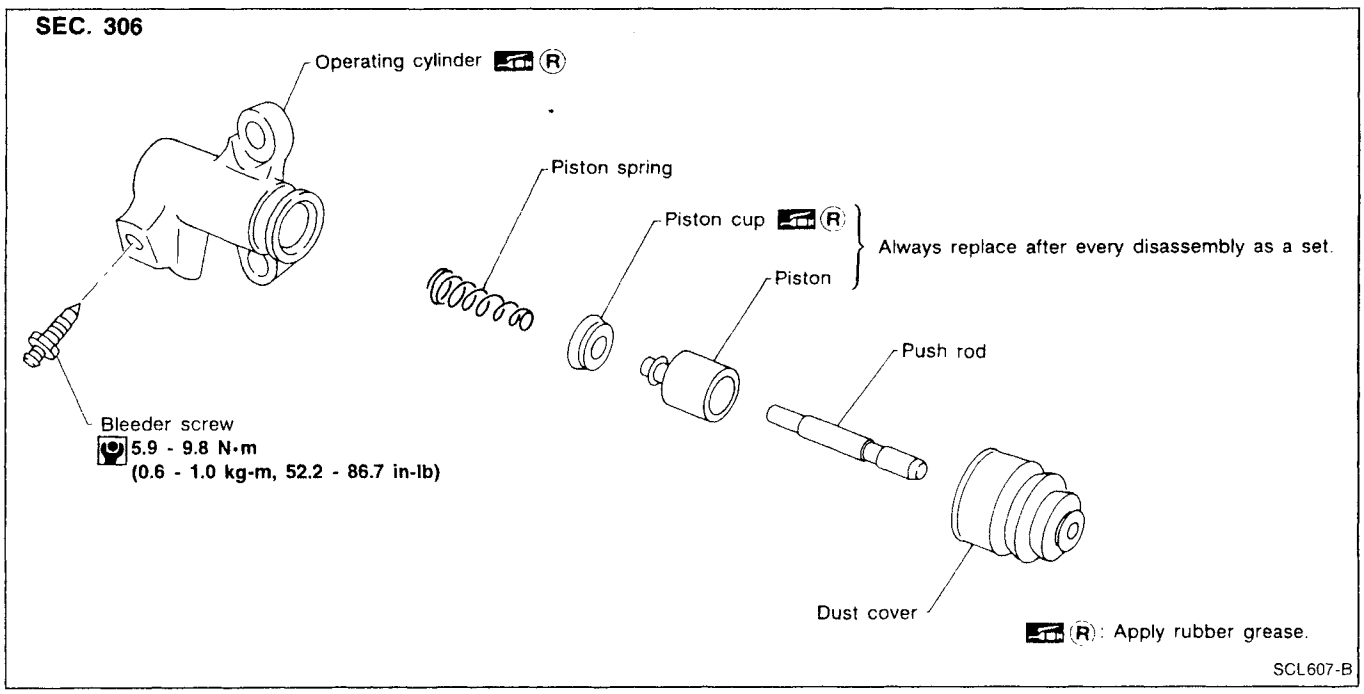

INSPECTION

Check the following items, and replace if necessary.

- Rubbing surface of cylinder and piston, for uneven wear, rust or damage
- Piston with piston cup, for wear or damage
- Piston spring, for wear or damage
- Dust cover, for cracks, deformation or damage

Clutch Damper

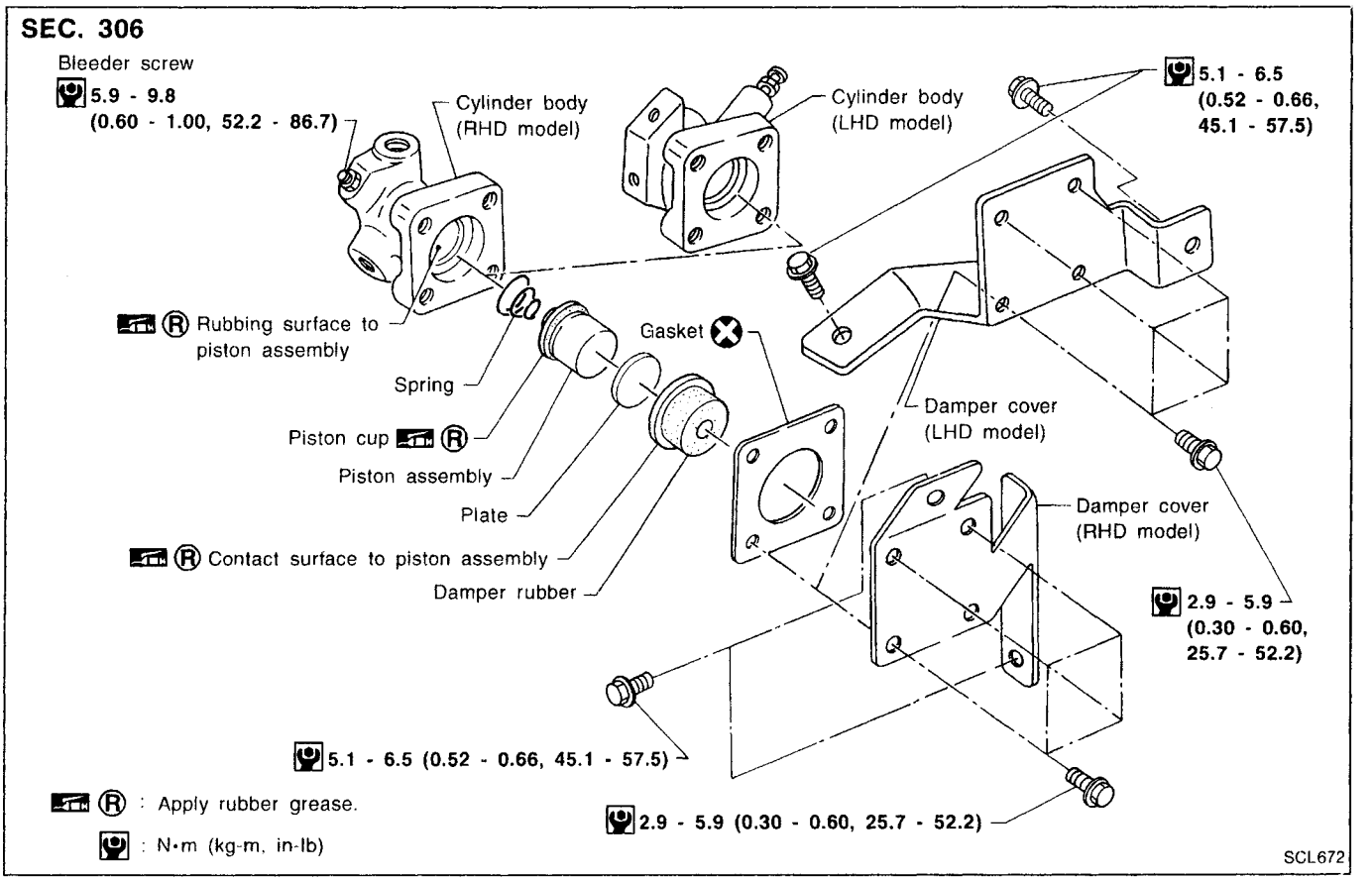

INSPECTION

- Check cylinder and piston rubbing surface for uneven wear, rust or damage. Replace if necessary.
- Check damper rubber and piston cup for cracks, deformation or damage. Replace if necessary.

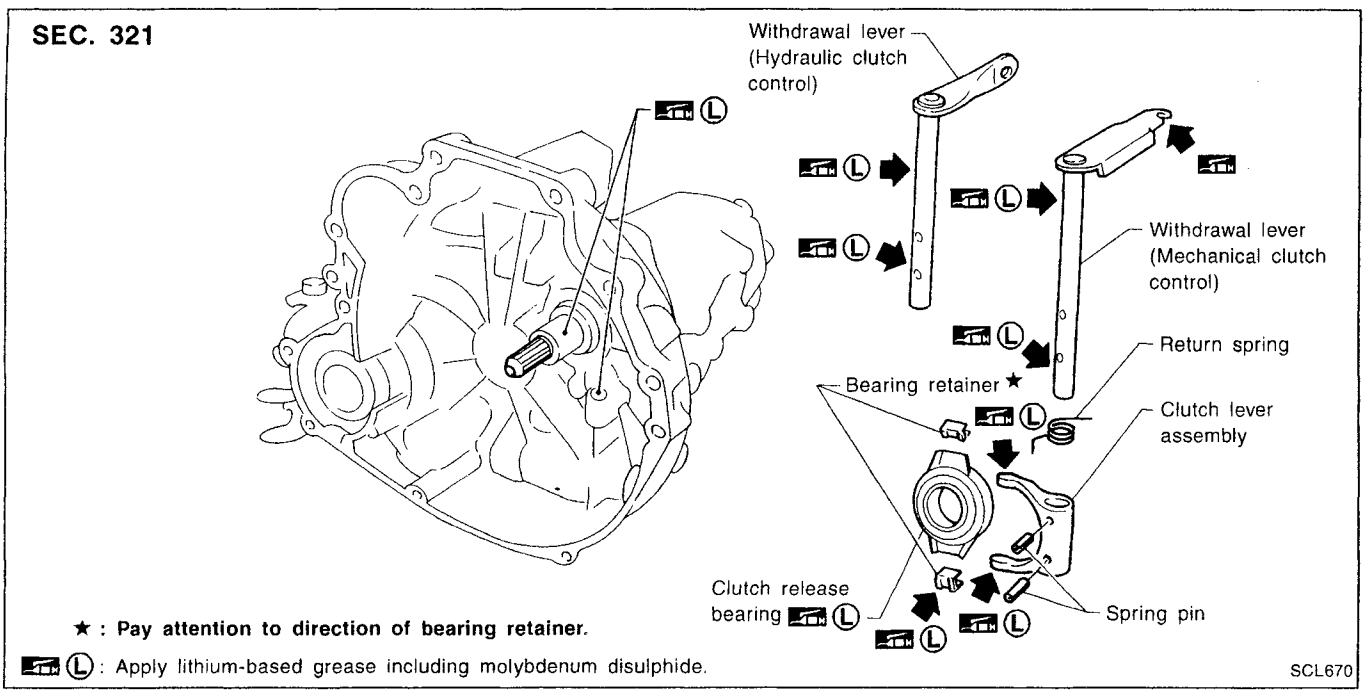

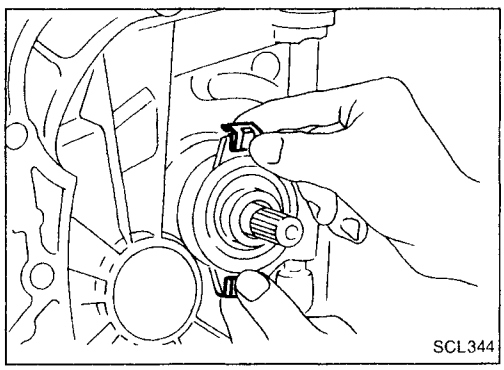

REMOVAL AND INSTALLATION

- Remove release bearing by pulling bearing retainers outward.

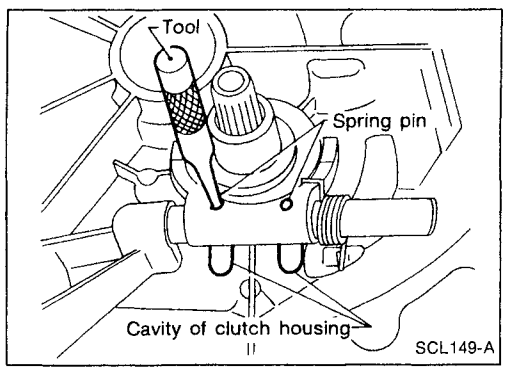

- Align spring pin with cavity of clutch housing and tap out spring pin.

INSPECTION

Check the following items, and replace if necessary.

- Release bearing, to see that it rolls freely and is free from noise, cracks, pitting or wear
- Release sleeve and withdrawal lever rubbing surface, for wear, rust or damage

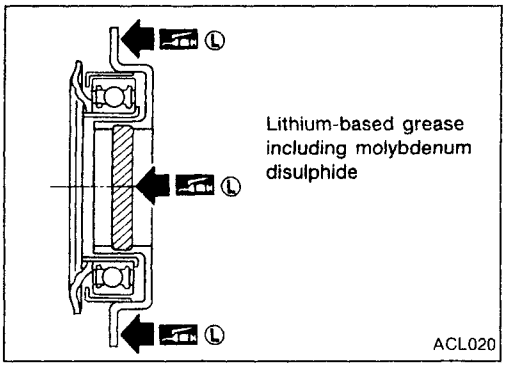

LUBRICATION

- Apply recommended grease to contact surface and rubbing surface.
- **Too much lubricant might damage clutch disc facing.**

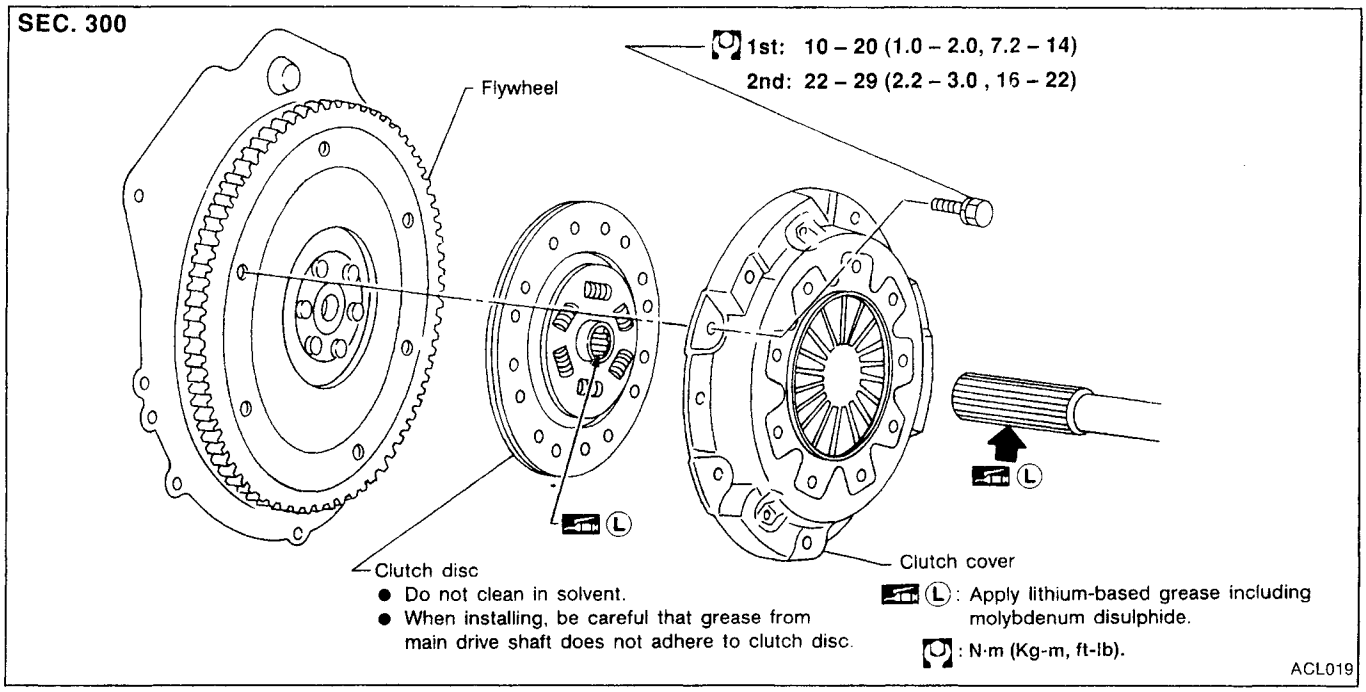

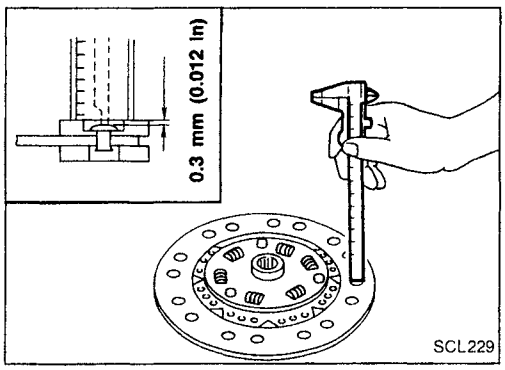

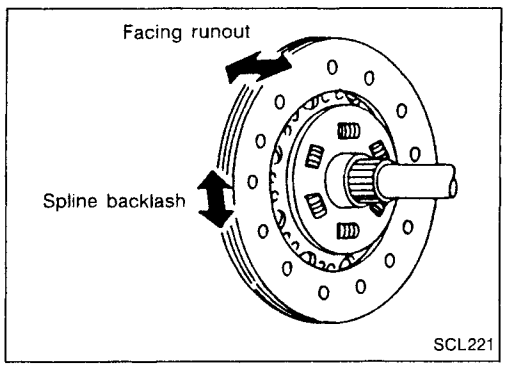

Clutch Disc

INSPECTION

Check the following items, and replace if necessary.

- Clutch disc, for burns, discoloration, oil or grease leakage
- Clutch disc, for wear of facing

  Wear limit of facing surface to rivet head:
  0.3 mm (0.012 in)

- Clutch disc, for backlash of spline and runout of facing.

  Maximum backlash of spline (at outer edge of disc):

Model 180	**0.7 mm (0.028 in)**
Model 190 and 200	**0.8 mm (0.031 in)**
Model 215	**0.9mm (0.035 in)**

  Runout limit:
  1.0 mm (0.039 in)

  Distance of runout check point (from hub center):

Model 180	**85 mm (3.35 in)**
Model 190	**90 mm (3.54 in)**
Model 200	**95 mm (3.74 in)**
Model 215	**102.5mm (4.04 in)**

Clutch Disc (Cont'd)

INSTALLATION

- Apply recommended grease to contact surface of splines.
- **Too much lubricant may damage clutch disc facing.**

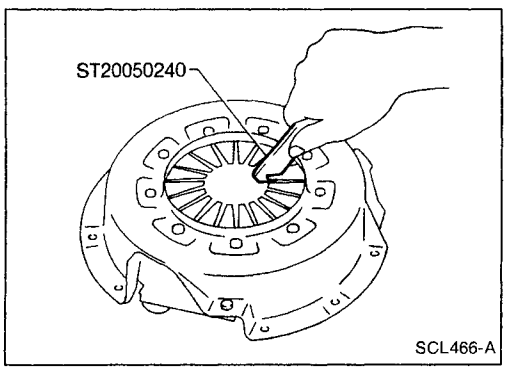

Clutch Cover and Flywheel

INSPECTION AND ADJUSTMENT

- Check clutch cover, installed on vehicle, for uneven diaphragm spring toe height.
  Uneven limit:

Model 180	**1.0 mm (0.039 in)**
Model 190, 200 and 215	**0.7 mm (0.028 in)**

- If out of limit, adjust the height with Tool.

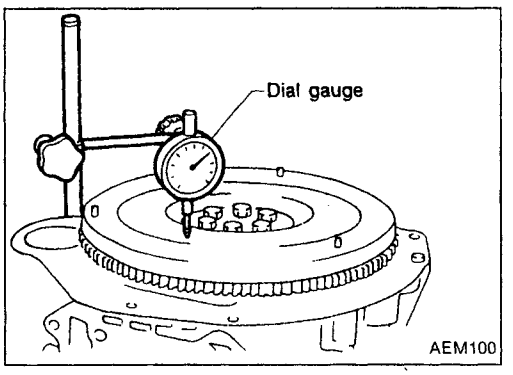

FLYWHEEL INSPECTION

CAUTION:

Do not allow any magnetic materials to contact the ring gear teeth.

- Inspect contact surface of flywheel for slight burns or discoloration. Clean flywheel with emery paper.
- Check flywheel runout.
  Maximum allowable runout:
  Refer to EM section ("Inspection", "CYLINDER BLOCK").

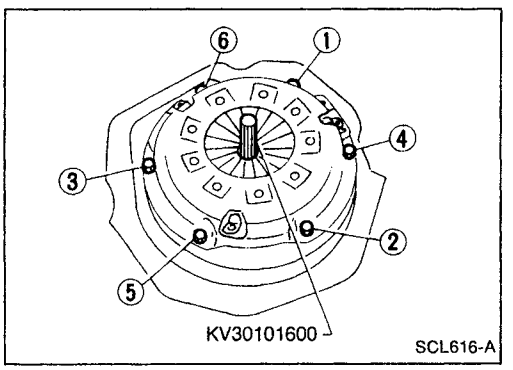

INSTALLATION

- Insert Tool into clutch disc hub when installing clutch cover and disc.
- Be careful not to allow grease to contaminate clutch facing.
- Tighten bolts in numerical order, in two steps.
  First step:
  [O]: 10 - 20 N·m (1.0 - 2.0 kg-m, 7 - 14 ft-lb)
  Final step:
  [O]: 22 - 29 N·m (2.2 - 3.0 kg-m, 16 - 22 ft-lb)

General Specifications

CLUTCH CONTROL SYSTEM

Engine	Except for CD20	CD20
Type of clutch control	Mechanical	Hydraulic

CLUTCH DAMPER

Inner diameter	mm (in)	19.05 (3/4)

CLUTCH MASTER CYLINDER

Inner diameter	mm (in)	15.87 (5/8)

CLUTCH OPERATING CYLINDER

Inner diameter	mm (in)	17.46 (11/16)

CLUTCH DISC

Unit: mm (in)

Engine	GA14DE	GA15DE, GA16DE	CD20	SR20DE
Model	180	190	200	215
Facing size (Outer dia. x inner dia. x thickness)	180 x 125 x 3.5 (7.09 x 4.92 x 0.138)	190 x 132 x 3.5 (7.48 x 5.20 x 0.138)	200 x 130 x 3.5 (7.87 x 5.12 x 0.138)	215 x 140 x 3.5 (8.46 x 5.51 x 0.138)
Thickness of disc assembly with load	8.0 - 8.4 (0.315 - 0.331) with 3,923 N (400 kg, A2 lb)			7.6 - 8.0 (0.299 - 0.315) with 3,923 N (400 kg, 882 lb)

CLUTCH COVER

Engine	GA14DE	GA15DE	GA16DE	CD20	SR20DE
Model	180	190		200	215
Full-load N (kg, lb)	3,236 (330, 728)	3,432 (350, 772)	3,825 (390, 860)	3,481 (355, 783)	4,413 (450, 992)

Inspection and Adjustment

CLUTCH PEDAL

Unit: mm (in)

Applied model	Except for CD20 engine models		CD20 engine models	
	RHD	LHD	RHD	LHD
Pedal height "H"	159 - 169 (6.26 - 6.65)*1	153 - 163 (6.02 - 6.42)*2	156 - 166 (6.14 - 6.54)*1	149 - 159 (5.87 - 6.26)*2
Pedal free travel "A" (at pedal pad)	11 - 15 (0.43 - 0.59)		9 - 16 (0.35 - 0.63)	
Withdrawal lever play "B"	2.5 - 3.5 (0.098 - 0.138)		—	

*1: Measured from surface of dash reinforcement panel to surface of pedal pad.
*2: Measured from surface of dash lower panel to surface of pedal pad.

CLUTCH DISC

Unit: mm (in)

Disc model	180	190	200	215
Wear limit of facing surface to rivet head	0.3 (0.012)			
Runout limit of facing	1.0 (0.039)			
Distance of runout check point (from hub center)	85 (3.35)	90 (3.54)	95 (3.74)	102.5 (4.04)
Maximum backlash of spline (at outer edge of disc)	0.7 (0.028)	0.8 (0.031)		0.9 (0.035)

CLUTCH COVER

Unit: mm (in)

Cover model	180	190	200	215
Uneven limit of diaphragm spring toe height	1.0 (0.039)	0.7 (0.028)		